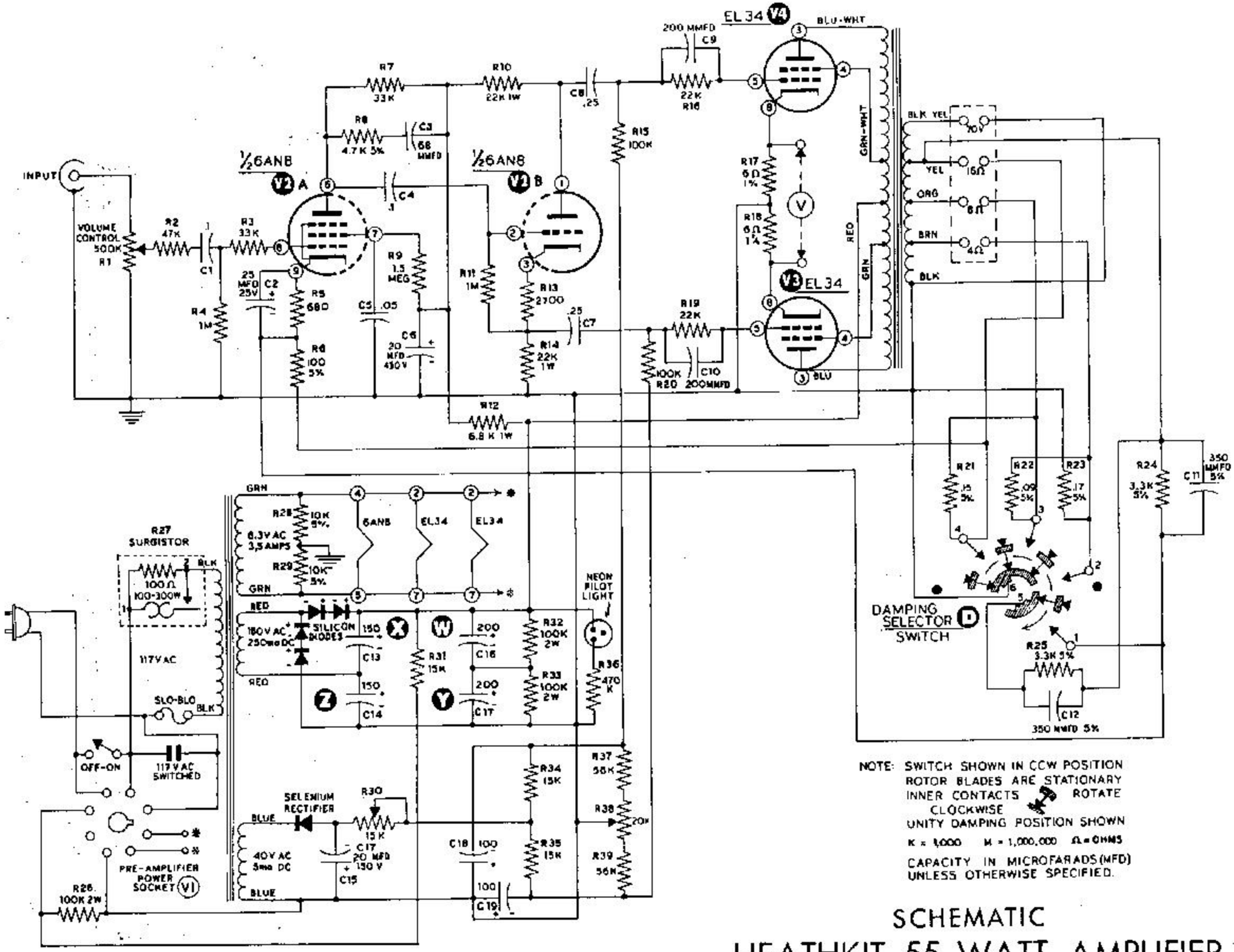

NOTE: SWITCH SHOWN IN CCW POSITION
ROTOR BLADES ARE STATIONARY
INNER CONTACTS ROTATE CLOCKWISE
UNITY DAMPING POSITION SHOWN
K = 1,000 M = 1,000,000 Ω = OHMS
CAPACITY IN MICROFARADS (MFD) UNLESS OTHERWISE SPECIFIED.

SCHEMATIC
HEATHKIT 55 WATT AMPLIFIER
MODEL W-7M